Motion Detection Sensor

IIS-MS-IR

The I.I.S. Wireless Motion Detection sensor uses an infrared sensor to accurately detect movements made by people/ animals within 16.4 ft range.

When the sensor detects movement it communicates with the I.I.S. Online Sensor Monitoring and Notification System. The data can be reviewed and exported as a data sheet or graph. Notifications can be set up through the online system to alert the user when motion has been detected.

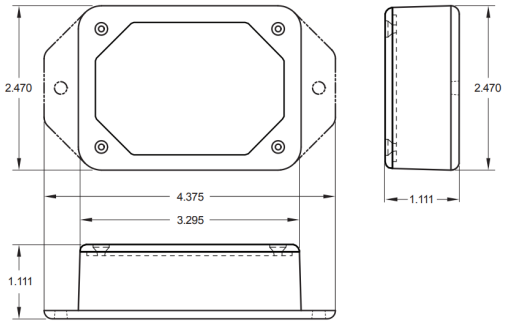

Innovative Industrial Solutions, Inc.
2830 Skyline Drive
Russellville, AR 72802
www.i-i-s.net
(479) 968-4266

Supply voltage	2.0–3.8 VDC (3.0–3.8 VDC using power supply) *
Current consumption	1.0 µA (Sleep) 570 µA (MCU idle) 2.5 mA (MCU active) 5.5 mA (radio RX mode) 22.6 mA (radio TX mode)
Operating temperature range (board circuitry and batteries)	-18°C to 55°C (0°F to 130°F) using alkaline -40°C to 85°C (-40°F to 185°F) using lithium **
Optimal battery temperature range (AA)	+10°C to +50°C (+50°F to +122°F)
Software Adjustable Sensor Detection Range	15 ft (4.5 m)/12 ft (3.7 m)/9 ft (2.7 m)
PIR Element Current consumption	3 µA
Sensor Warmup Time	7 Seconds
Datalogging	Datalogs 2000 to 4000 readings if gateway connection is lost (non-volatile flash, persists through the power cycle): - 10-minute heartbeats = ~ 22 days - 2-hour heartbeats = ~ 266 days
Wireless range	1,200+ ft non-line-of-sight
Security	Encrypt-RF® (256-bit key exchange and AES-128 CTR)
Weight	3.7 ounces
Certifications FC CE Industry Canada	900 MHz product; FCC ID: ZTL-G2SC1 and IC: 9794A-G2SC1. 868 and 433 MHz product tested and found to comply with: EN 300 220-2 V3.1.1 (2017-02), EN 300 220-2 V3.1.1 (2017-02) and EN 60950

* Hardware cannot withstand negative voltage. Please take care when connecting a power device.

Power Options

The standard version of this sensor is powered by two replaceable 1.5 V AA sized batteries (included with purchase).

This sensor is also available with a line power option. The line powered version of this sensor has a barrel power connector allowing it to be powered by a standard 3.0–3.6 V power supply. The line powered version also uses two standard 1.5 V AA batteries as backup for uninterrupted operation in the event of line power outage.

Power options must be selected at time of purchase, as the internal hardware of the sensor must be changed to support the selected power requirements.